SYSTEM POWER (5V 3V 12V)

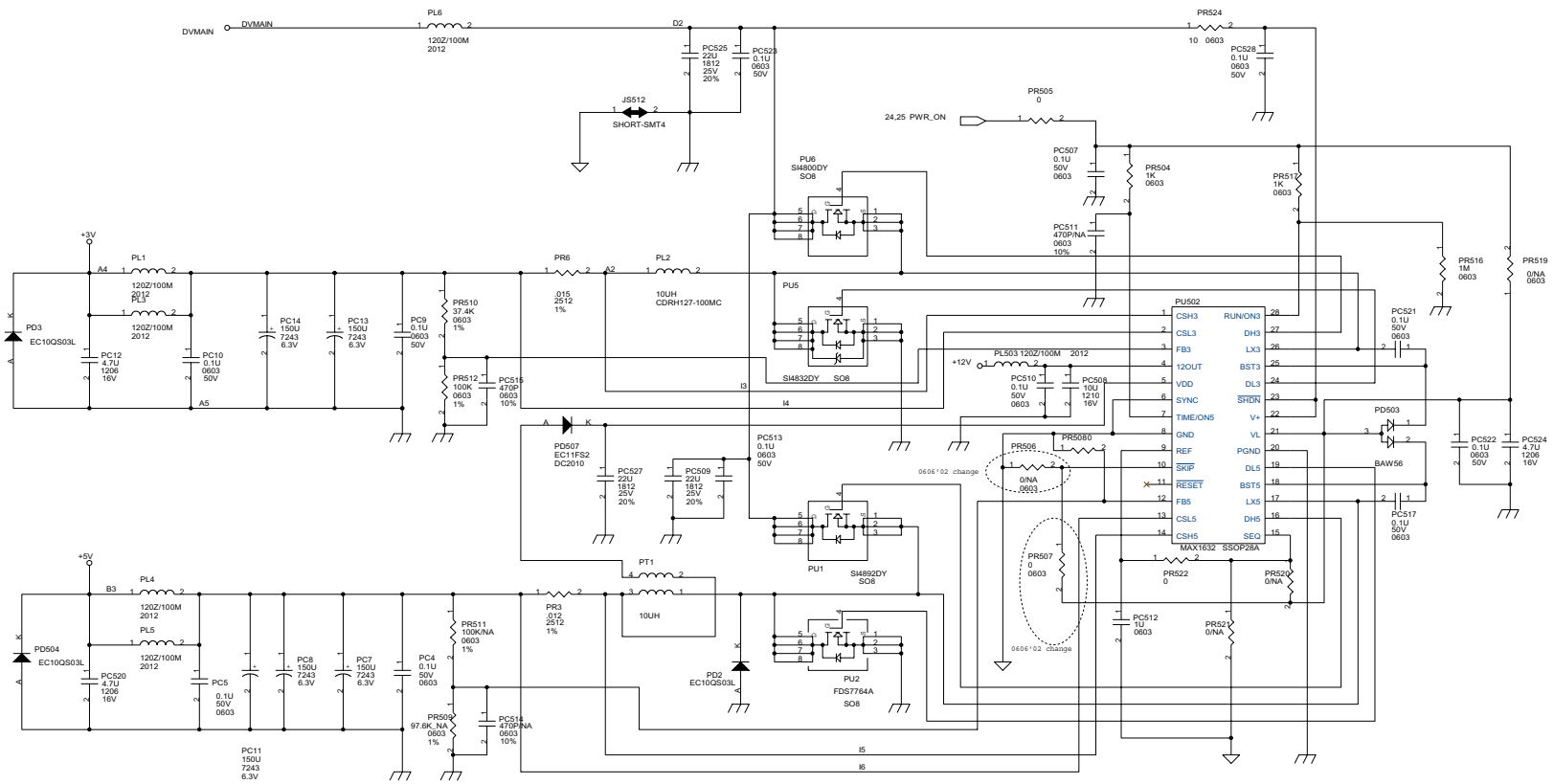

Title	SYSTEM POWER
Size	Document Number 411673400003
Rev	01
Date:	Wednesday, August 28, 2002
Sheet	29 of 32

PDF created with FinePrint pdfFactory trial version http://www.fineprint.com