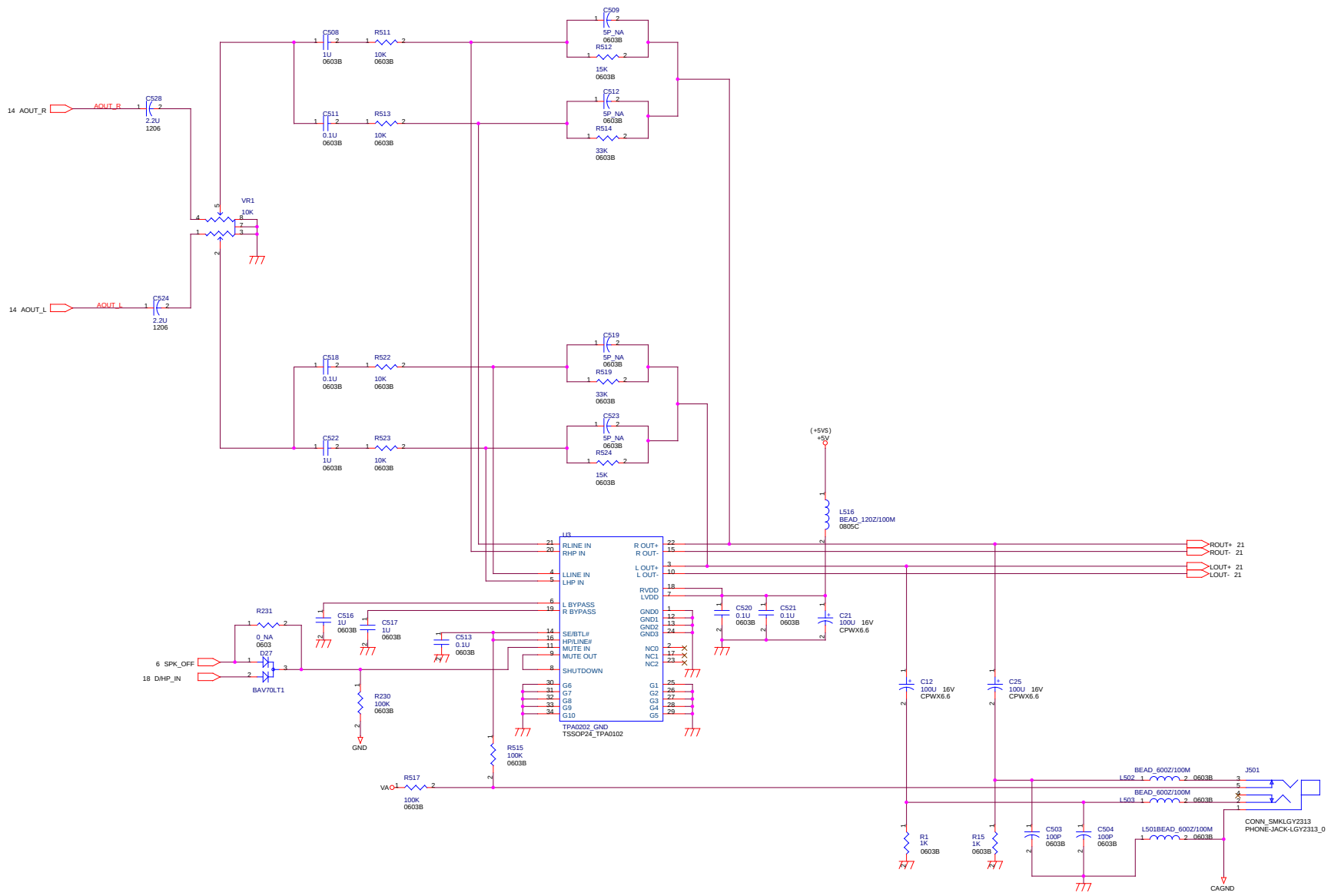

MITAC INTERNATIONAL CORP.

Title: 6120W/N - MOTHER BD

Size	Document Number	Rev
C	SD411667900001	02

Date: Monday, April 10, 2000 Sheet 15 of 24