PORT REPLICATOR CONN.

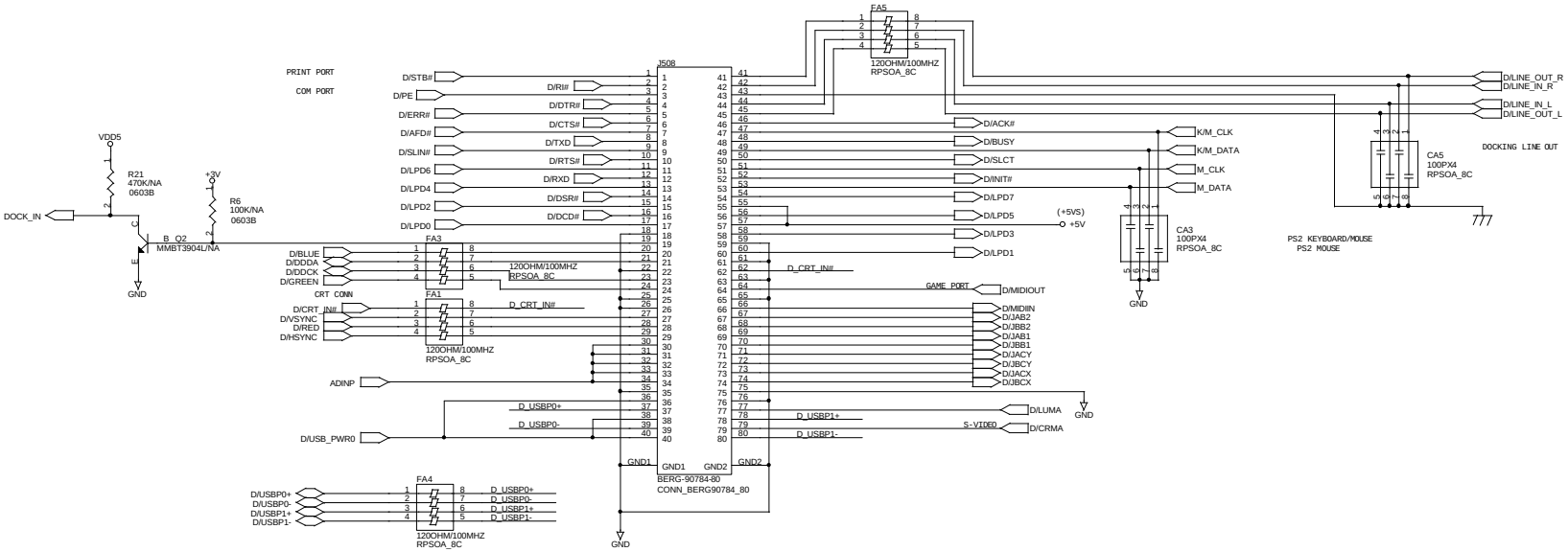

MITAC INTERNATIONAL CORP.

Title	6020 - MOTHER BD	
Size C	Document Number SD411665700001	Rev 0C
Date: Friday, January 15, 1999	Sheet 21 of 26	